ECLIPSE II FLUSH DOOR LOCKER PARTS

| NO. | DESCRIPTION | GAUGE |
|---|---|---|
| 1 | BACK PANEL | 24 |
| 2 | SIDE PANEL (REVERSIBLE) | 24 |
| 3 | TOP & HAT SHELF | 24 |
| 4 | BOTTOM SHELF | 16 |
| 5 | DOOR STRIKE FRAME | 16 |
| 6 | DOOR (LINER 24 GAUGE) | 16 |
| 7 | HASP | 12 |
| 8 | STAINLESS STEEL POCKET | |
| 9 | CONTINUOUS HINGE & FRAME | 16 |
| 10 | RIVET | |
| 11 | COAT HOOK | |
| 12 | DOOR BUMPER – 2 PER DOOR | |
| 13 | #8 x 5/8" BOLT & NUT | |
| 14 | | |
| 15 | HONEYCOMB CORE DOOR | |
| 16 | NUMBER PLATE & DOOR PULL | |

EXTRA & SPECIAL PARTS

27
28

DIM "A" DIM "B" DIM "C"

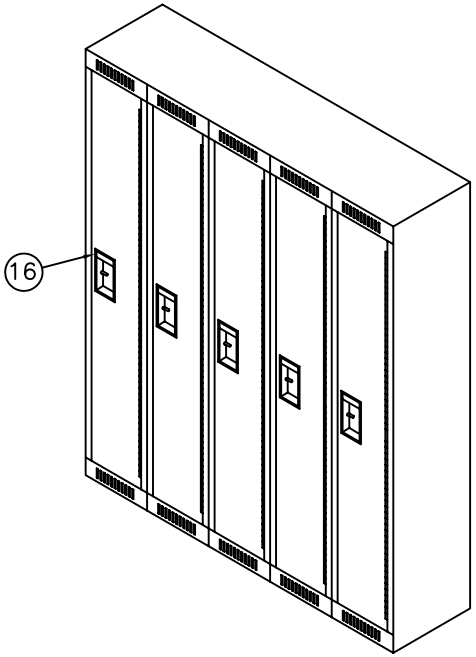


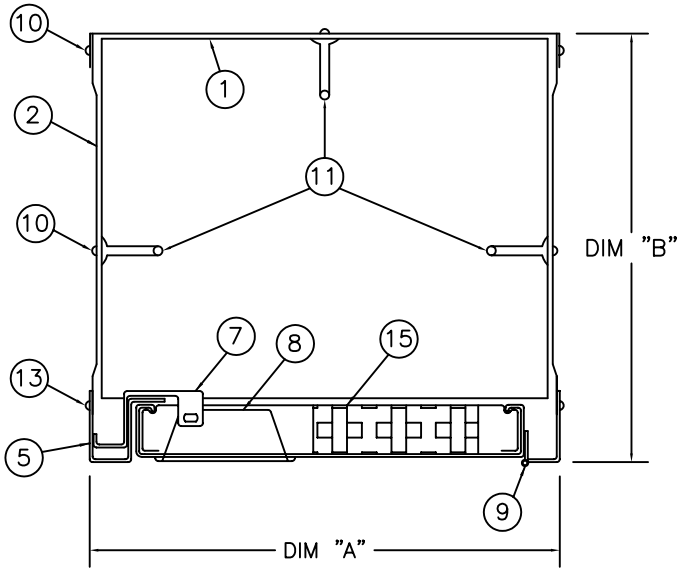


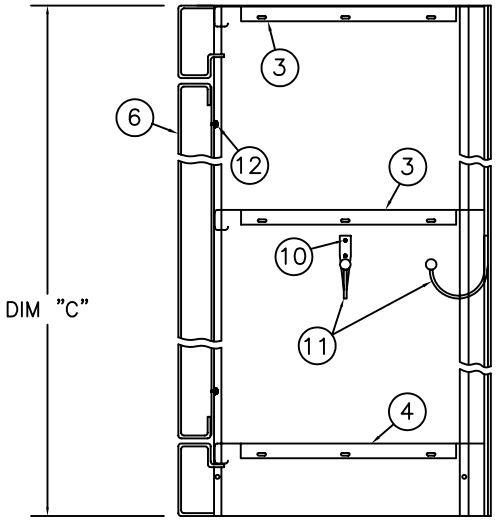


GSS
GENERAL STORAGE SYSTEMS

2995 PAGE STREET, LONDON
ONTARIO, CANADA, N5V 4P6
PHONE: (519) 453–5910
FAX: (519) 455–0037

P.O. BOX 583, O'FALLON
MISSOURI, U.S.A. 63366
PHONE: (314) 517–6975
FAX: (636) 379–0088

PROJECT:

STYLE:
*TYPICAL SINGLE TIER ECLIPSE II LOCKER*

CUSTOMER:

QUOTE NO:

ARCH/ENG/CONT:

REVISION NO:

DATE: MARCH 30, 2006

SCALE: NOT TO SCALE

DESIGNED BY:

APPROVED BY:

DRAWN BY:

DRAWING No:

SHEET 1 OF 1

DIMENSIONS MUST NOT BE SCALED, ALL MEASUREMENTS MUST BE CHECKED AND VERIFIED AND ALL ERRORS SHALL BE REPORTED TO GSS PRIOR TO PROCEEDING WITH JOB.

ALL PRINTS OF SPECIFICATIONS AND PLANS ARE THE PROPERTY OF GENERAL STORAGE SYSTEMS MFG LTD AND NOT TO BE COPIED OR USED WITHOUT WRITTEN PERMISSION.